BW16 Specification

Version V1.2.1

Copyright ©2024

Copyright © 2024 Shenzhen Ai-Thinker Technology Co., Ltd All Rights Reserved

Document resume

Version	Date	Develop/revise content	Edition	Approve
V0.9	2019.06.15	Initial release	Yang Xiaofei	Hong Xu
V1.0	2019.10.29	Updated	Xie Yiji	Hong Xu
V1.1	2021.02.05	Updated flash	Xie Yiji	Hong Xu
V1.2	2023.08.30	Updated temperature picture	Li xiaocheng	Hong Xu
V1.2.1	2024.03.25	Updated Power Requirements Updated Shield Pattern Add USB Differential Pair Signal Description	Xiangfei Zeng	Hong Xu

Copyright © 2024 Shenzhen Ai-Thinker Technology Co., Ltd All Rights Reserved

Content

1. Product Overview 4
1.1. Features 5
2. Main Parameters 6
2.1. Electrical parameter 6
2.2. Electrical parameter 7
2.3. Wi-Fi Radio Performance 7
2.4. BLE Radio Performance 8
3. Appearance & Package 9
4. Pin Definitions 10
5. Schematic 12
6. Design Guideline 13
6.1. Application Circuit 13
6.2. Recommend PCB Package 13
6.3. Antenna Layout Requirements 14
6.4. Power Supply Requirements 14
6.5. GPIO 15
7. ROLLING OF Reflow soldering 16
8. ROLLING OF Reflow soldering 16
9. Package Information 17
10. Contact us 17
Disclaimer and copyright notice 18
Notice 18
Statement 19

Copyright © 2024 Shenzhen Ai-Thinker Technology Co., Ltd All Rights Reserved

1. Product Overview

BW16 is a dual-frequency Wi-Fi Bluetooth SoC module based on RTL8720DN. BW16 supports dual-frequency (2.4ghz or 5ghz) WLAN and low-power Bluetooth 5.0; it integrates ARM V8 (compatible with Cortex-M4F) high-performance MCU,ARM V8M (compatible with Cortex-M0) low-power MCU,WLAN(802.11 a / b / g / n), MAC, Bluetooth baseband and RF baseband) and provides a set of configurable GPIO ports for the control of different peripherals.

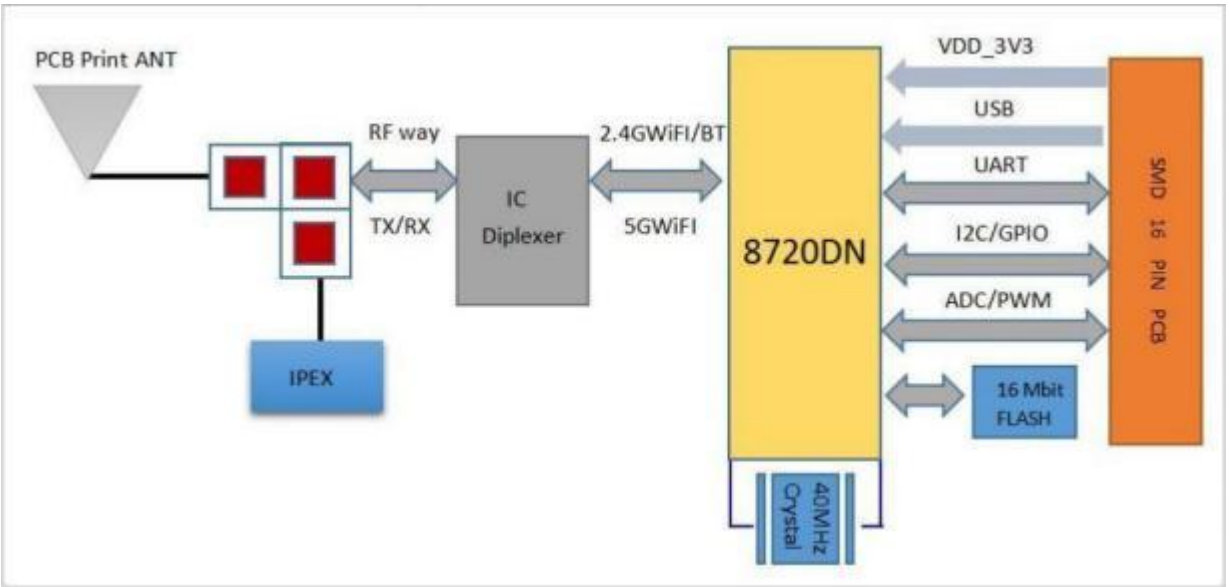

Figure 1 Main chip architecture diagram

Copyright © 2024 Shenzhen Ai-Thinker Technology Co., Ltd All Rights Reserved

1.1. Features

- Support for either 802.11a/b/g/n, 2.4GHz or 5GHz
- Supports the HT 20 / HT 40 mode
- Supports low power beacon listening mode, low power receiving mode and low power hanging mode
- Built-in AES / DES / SHA hardware engine
- Support TrustZone-M and support safe startup
- Supports the SWD debug port access protection and disabled modes
- Support for BLE 5.0
- Bluetooth supports high-power mode (7 dBm, sharing the same PA with Wi-Fi)
- Wi-Fi and Bluetooth share the same antenna
- Support the STA / AP / STA + AP mode and confounding mode
- Support for Android, iOS Simple Config (App) Wi-Fi one-click distribution network
- Support for Bluetooth auxiliary distribution network
- Support for serial port local upgrade and remote firmware upgrade (FOTA)
- Support secondary development, support programming in Linux and Windows environments
- Support for Arduino development

Copyright © 2024 Shenzhen Ai-Thinker Technology Co., Ltd All Rights Reserved

2. Main Parameters

Table 1 Main Parameter

Model	BW16
Package	SMD-16
Dimension	24*16*3(±0.2)MM
Antenna	On-Board PCB Antenna / I-PEX
Frequency	2400~2483.5MHz & 5180~5825MHz
Operating Temperature	-40 ℃~85 ℃
Store Temperature	-40 ℃~125 ℃，<90%RH
Power Supply Voltage	3.0V~3.6V, I>500mA
Interface	UART/GPIO/ADC/PWM/IIC/SPI/IR/SWD/USB
Available GPIO	13
UART Baudrates	110~ 6000000 bps，Default 115200bps
Bluetooth	BLE 5.0 without BR/EDR
Wireless Security	WAPI, WEP, WPA/WPA2/WPA3-PSK, WPA/WPA2/WPA3-EAP
SPI Flash	Default 4MB (Optional 2MB, 8MB, 16MB)

2.1. Electrical parameter

BW16 module is an electrostatic sensitive device, which needs special ES precautions.When usd ESD protective devices should be added. The correct ESD processing and packaging must be adopted in the transportation, operation and use of BW16 modules. Do nottouch the module by hand or weld with a non-antistatic soldering iron to avoid damage to the module.

Figure 2 ESD Warning Logo

Copyright © 2024 Shenzhen Ai-Thinker Technology Co., Ltd All Rights Reserved

2.2. Electrical parameter

Table 2 Electric Characteristic

2.3. Wi-Fi Radio Performance

Table 3 Wi-Fi Radio Performance

Copyright © 2024 Shenzhen Ai-Thinker Technology Co., Ltd All Rights Reserved

3. Appearance & Package

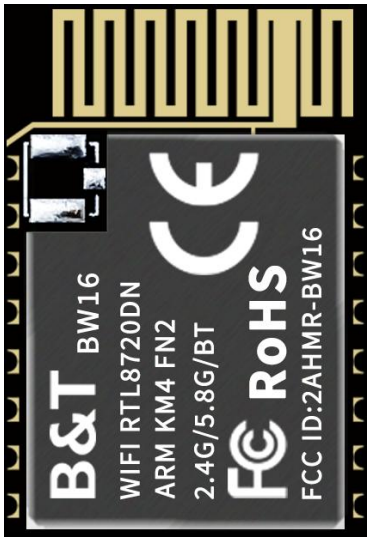

Front Front Back

Figure 3 Appearance

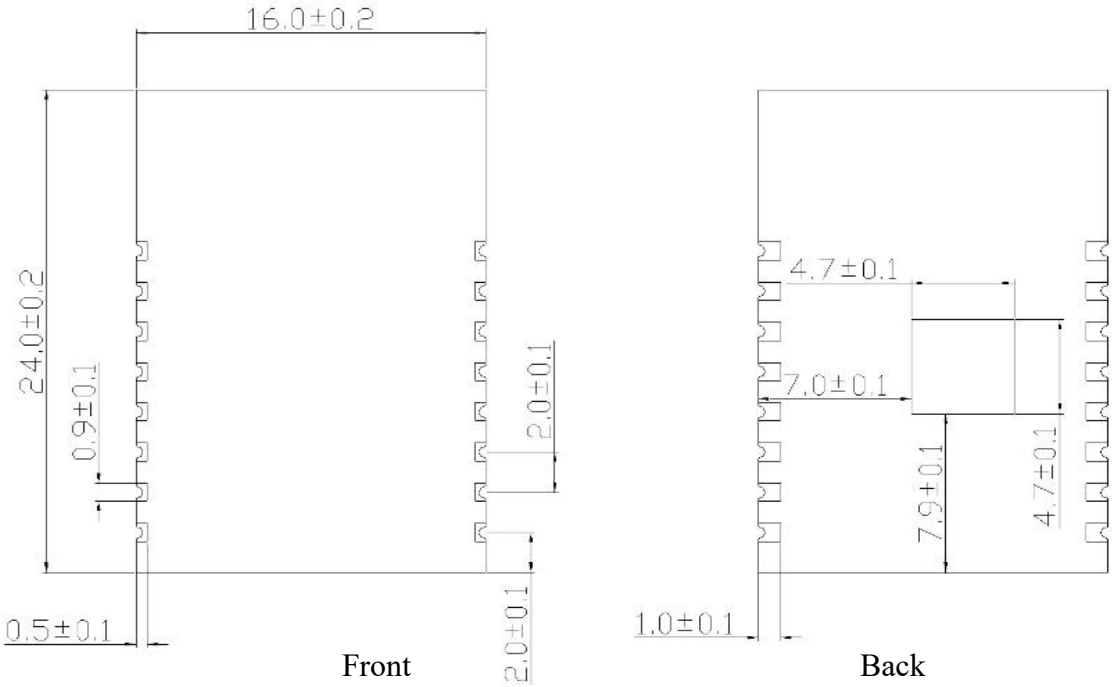

Figure 4 Package

Copyright © 2024 Shenzhen Ai-Thinker Technology Co., Ltd All Rights Reserved

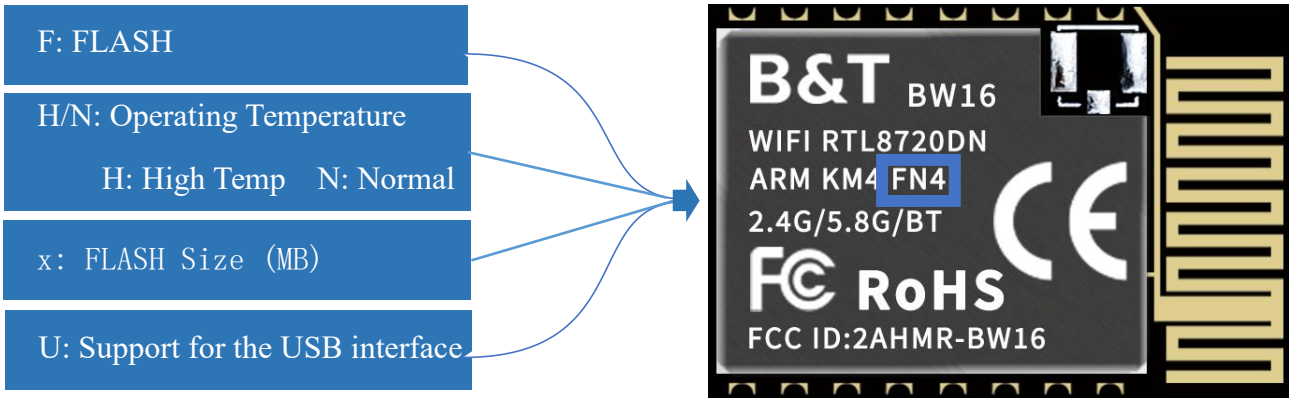

Figure 5 Order Information 支持 USB 接口

4. Pin Definitions

BW16 has 16 interface，refer to following Pin diagram ，Table 2.2 is definition of interfaces.

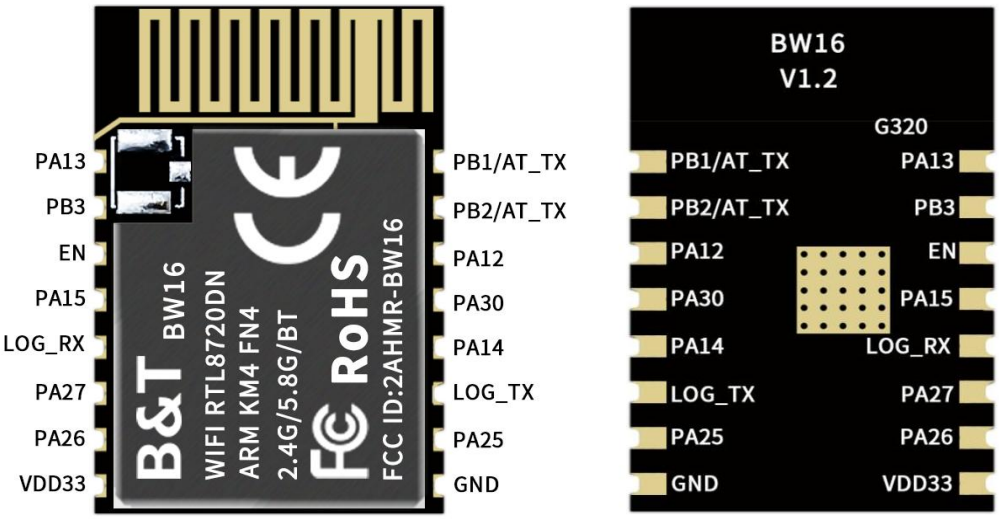

Front Back

Figure 6 Pin out Diagram

Copyright © 2024 Shenzhen Ai-Thinker Technology Co., Ltd All Rights Reserved

Table 5 Pin definitions

No	Name	Description
1	PA13	LP_PWM1/SPI1_MISO
2	PB3	ADC/SWD_CLK
3	CHIP_EN	Chip Enabled
4	PA15	SPI1_CS
5	PA8	UART_LOG_RXD
6	PA27	SWD_DATA
7	PA26	LP_I2C_SDA/LP_PWM5
8	VDD_3V3	3.3V（VDD）
9	GND	Ground
10	PA25	LP_I2C_SCL/LP_PWM4/HSDM
11	PA7	UART_LOG_TXD
12	PA14	SPI1 CLK
13	PA30	LP_PWM1
14	PA12	SPI1_MOSI/LP_PWM0
15	PB2	LP_UART_RXD
16	PB1	LP_UART_TXD
Note: 1. When the LOG _ TX moment is low, the module enters the burning mode; When the moment is high, the module starts normally and the internal pull up by default.		

Copyright © 2024 Shenzhen Ai-Thinker Technology Co., Ltd All Rights Reserved

5. Schematic

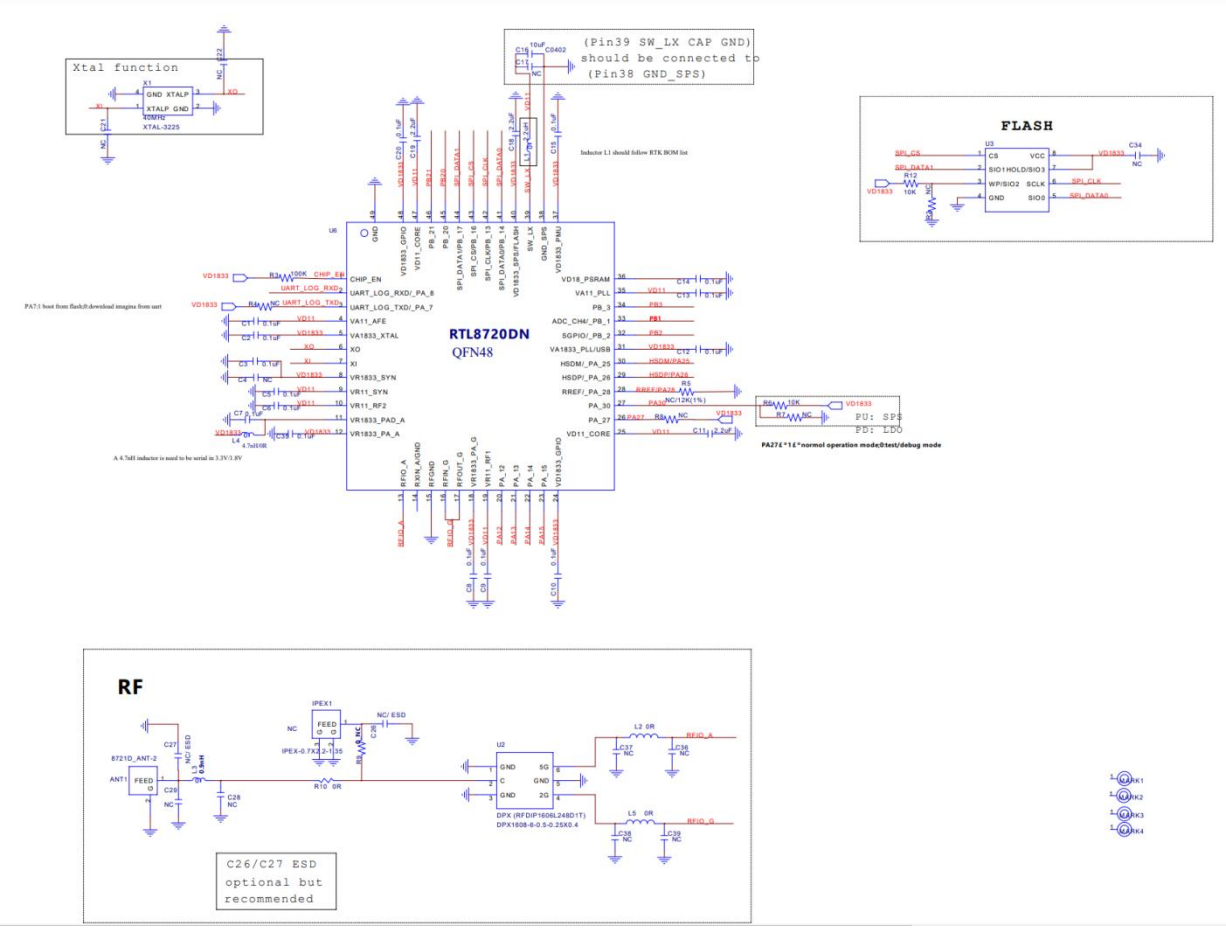

Figure7 Schematic

Copyright © 2024 Shenzhen Ai-Thinker Technology Co., Ltd All Rights Reserved

6. Design Guideline

6.1. Application Circuit

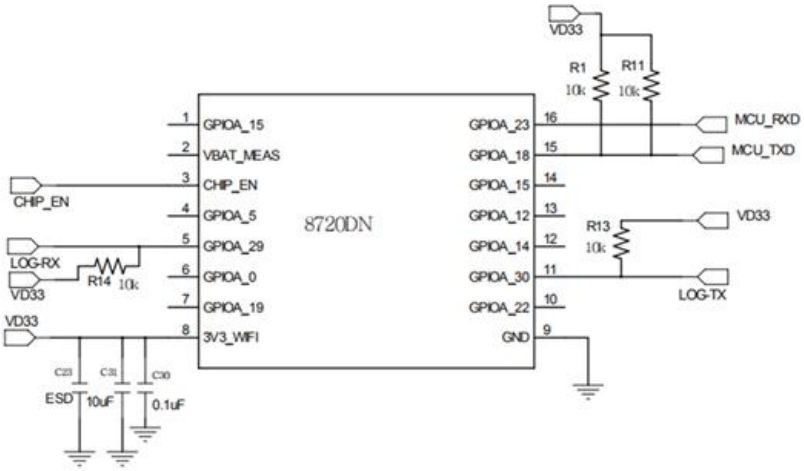

Figure 8 Application Circuit

Note:

- LOG _ TX is the starting control foot in normal operating mode at high level and burning firmware mode at low level. Internal chip default high level.

6.2. Recommend PCB Package

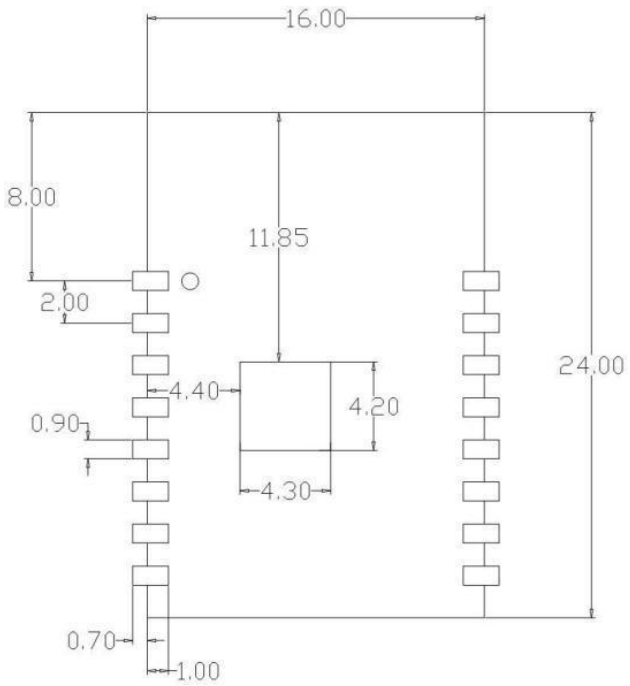

Figure 9 Recommend PCB Package

Copyright © 2024 Shenzhen Ai-Thinker Technology Co., Ltd All Rights Reserved

6.3. Antenna Layout Requirements

- Installation position on the main board，advise for following two ways:
- The module is placed on the edge of the main board, and the antenna area is extended out of the edge of the main board. 2.In order to meet the performance of the on-board antenna, metal parts are prohibited from being placed around the antenna.

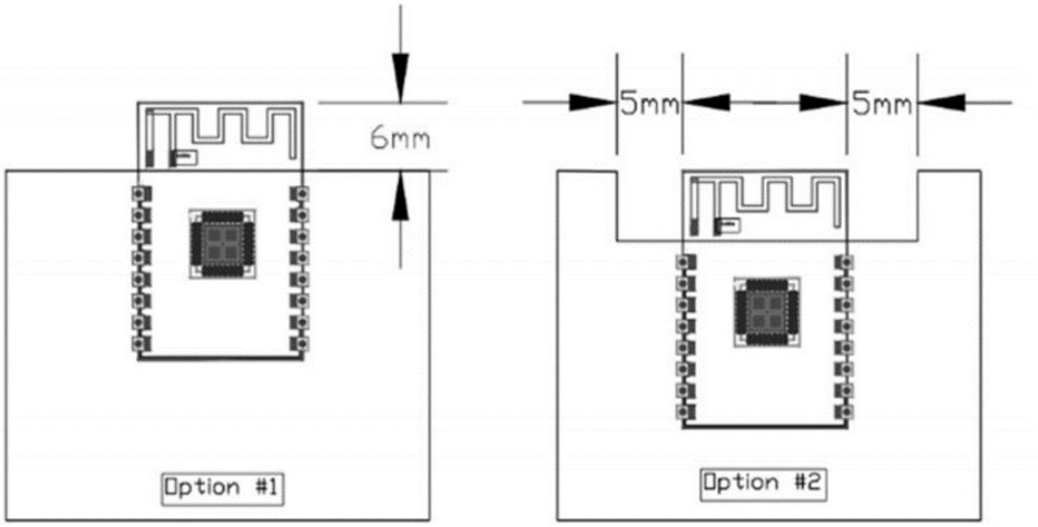

Figure 10 Schematic diagram of Antenna layout

6.4. Power Supply Requirements

- Recommended voltage 5V, Peak:Current over 500mA .
- It is recommended to use the LDO power supply；If DC-DC is used, the ripple is controlled within 30 mV.
- DC-DC power supply circuit is recommended to reserve the position of the dynamic response capacitor, and the output ripple can be optimized when the load change is large.
- Proposed addition of ESD Devices to 5V Power supply Interface.
- For 3.3V application, if the power up slew rate from 1.5V to 3.0V is slower than 15ms, The wide range VCC Flash is needed or add reset IC.
- In the process of power off to power on, if the power off voltage can't be guaranteed to drop below 0.3v and power on again, reset IC should be added.

Copyright © 2024 Shenzhen Ai-Thinker Technology Co., Ltd All Rights Reserved

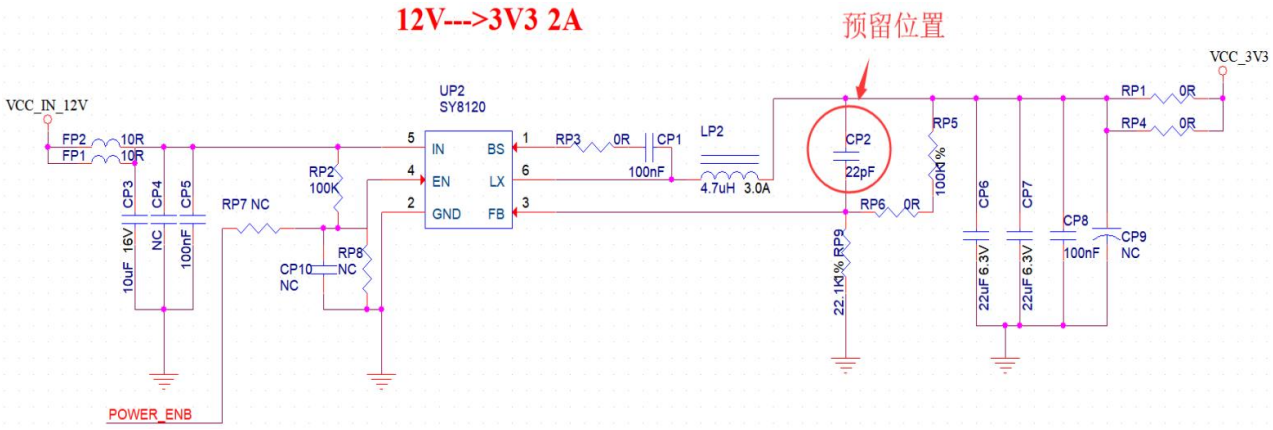

Figure10 DC-DC Buck Circuit

6.5. GPIO

- At the periphery of the module, some GPIO ports are led out, and a resistance of 10-100 ohms can be connected in series on the IO port for use. This suppresses overshoot and is more stable on both sides. Help for both EMI and ESD.
- For the up-and-down drawing of the special io-port, reference will be made to the use description of the specification, which will affect the start-up configuration of the module.
- The IO port of the module is 3.3 v. If the main control does not match the io-level of the module, it is necessary to increase the level conversion circuit.
- If the IO interface is directly connected to the peripheral interface, or the pins and other terminals, it is recommended to reserve the ESD device near the terminal at the IO trace.

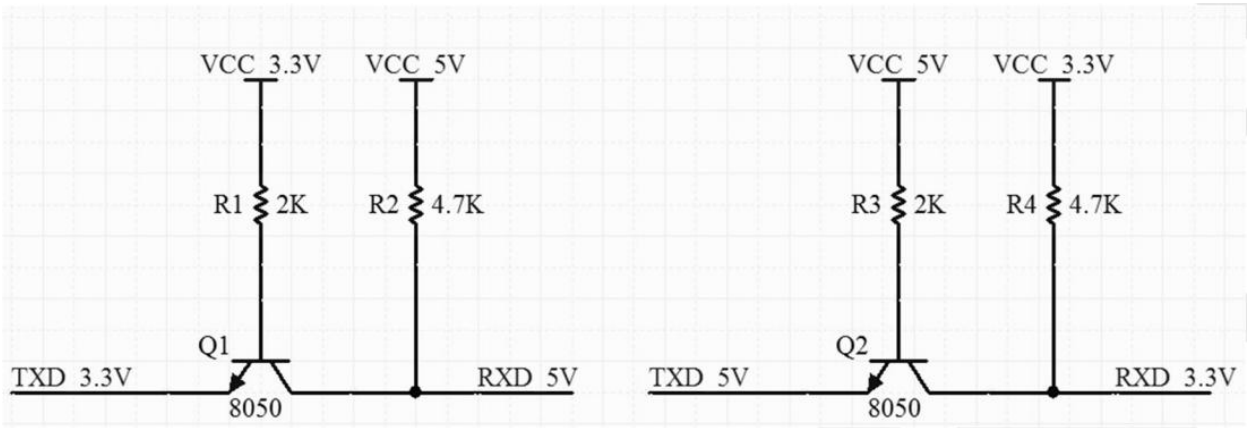

Figure 11 switching circuit

Copyright © 2024 Shenzhen Ai-Thinker Technology Co., Ltd All Rights Reserved

7. ROLLING OF Reflow soldering

Products sealed in a moisture-proof bag shall be stored in a non-condensing atmosphere of <40℃ / 90% RH.

The moisture sensitivity grade MSL of the module is level 3.

After the vacuum bag is unsealed, it must be used within 168 hours at 25 ± 5℃ / 60% RH, otherwise it needs to be baked before the secondary launch.

8. ROLLING OF Reflow soldering

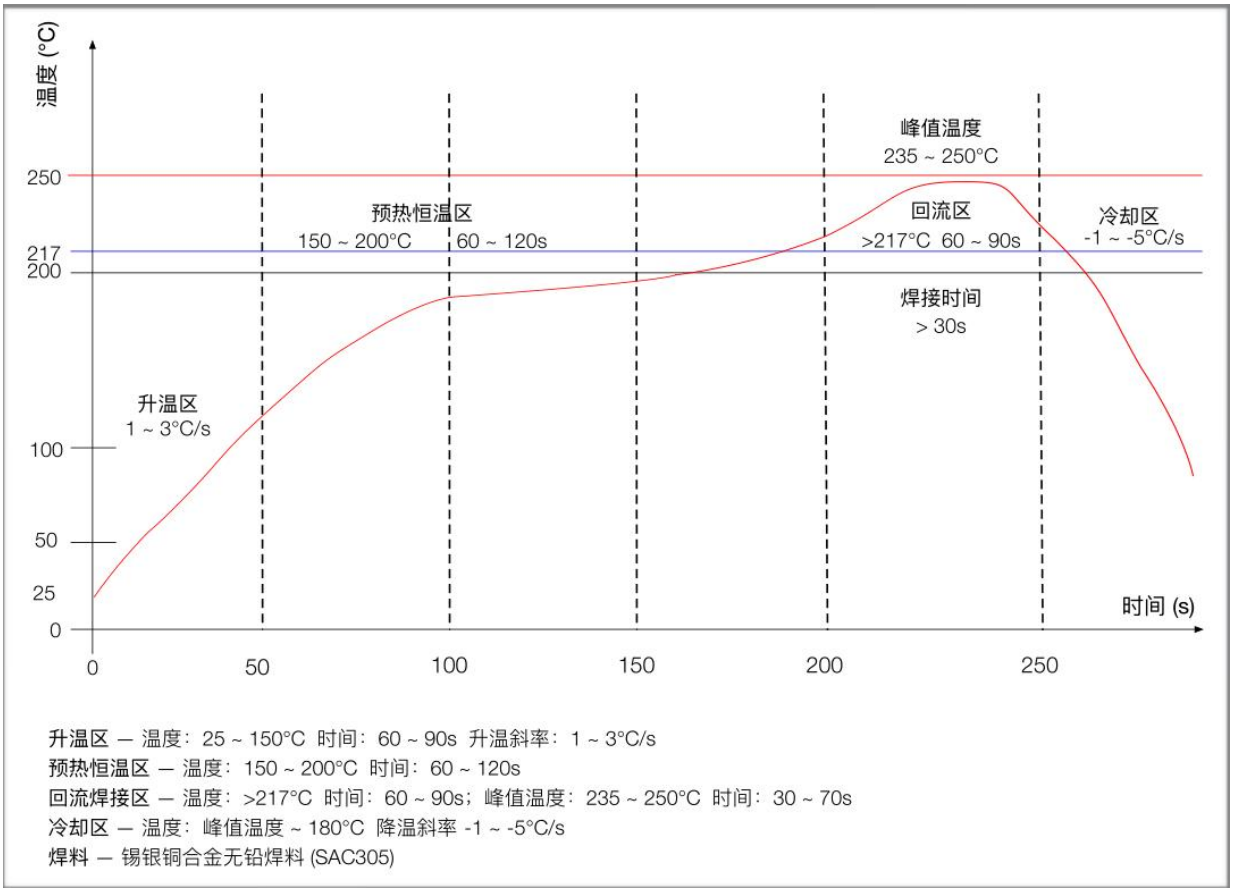

Figure12 ROLLING OF Reflow soldering

Copyright © 2024 Shenzhen Ai-Thinker Technology Co., Ltd All Rights Reserved

9. Package Information

BW16 module is packaged with 800 pcs / disk. As shown in the figure below:

Figure 13 packing ribbon diagram

10.Contact us

Ai-Thinker official website Official Forum Develop DOCS LinkedIn

Tmall shop Taobao shop Alibaba shop

Technical support Email: support@aithinker.com

Domestic business cooperation: sales@aithinker.com

Overseas business cooperation：overseas@aithinker.com

Company address: Room 403-405,408-410, Block C, Huafeng Smart Innovation Port, Gushu 2nd Road, Xixiang, Baoan District, Shenzhen.

Tel: 0755-29162996

WeChat mini

WeChat official

Copyright © 2024 Shenzhen Ai-Thinker Technology Co., Ltd All Rights Reserved

Disclaimer and copyright notice

The information in this article, including the URL address for reference, is subject to change without notice.

The document is provided "as is" without any guarantee responsibility, including any guarantee for merchantability, suitability for a specific purpose, or non-infringement, and any guarantee mentioned elsewhere in any proposal, specification or sample. This document does not bear any responsibility, including the responsibility for infringement of any patent rights arising from the use of the information in this document. This document does not grant any license for the use of intellectual property rights in estoppel or other ways, whether express or implied.

The test data obtained in the article are all obtained from Ai-Thinker's laboratory tests, and the actual results may vary slightly.

All brand names, trademarks and registered trademarks mentioned in this article are the property of their respective owners, and it is hereby declared.

The final interpretation right belongs to Shenzhen Ai-Thinker Technology Co., Ltd.

Notice

Due to product version upgrades or other reasons, the contents of this manual may be changed.

Shenzhen Ai-Thinker Technology Co., Ltd. reserves the right to modify the contents of this manual without any notice or prompt.

This manual is only used as a guide. Shenzhen Ai-Thinker Technology Co., Ltd. makes every effort to provide accurate information in this manual. However, Shenzhen Ai-Thinker Technology Co., Ltd. does not guarantee that the contents of the manual are completely free of errors. All statements and information in this manual. And the suggestion does not constitute any express or implied guarantee.

Copyright © 2024 Shenzhen Ai-Thinker Technology Co., Ltd All Rights Reserved

Statement

ormation and other resources (the "Resources") "as is" without warranties of any kind, express or implied. Including, but not limited to, express or implied warranties of suitability, fitness for a particular use, or non-infringement of any third party's intellectual property rights.And specifically declares that it is not liable for any necessary or incidental losses, including but not limited to, arising from the application or the use of any of our products and circuits.

Ai-Thinker reserves the right to release information in this document (including but not limited to metrics and product descriptions) and any changes to our products without prior notice. This document automatically supersedes and replaces all information provided in previous versions of the same document number file.

These resources are available to skilled developers who design with Ai-Thinker products. You are solely responsible for: (1) Selecting the appropriate Ai-Thinker products for your application; (2) Design, validate, and run your application and product throughout its life cycle; (3) Ensure that your application meets all applicable standards, codes and laws, as well as any other functional security, information security, regulatory or other requirements.

Ai-Thinker may authorize you to use these resources only for the development of applications of Essence Products described in this Resource. Without the permission of Ai-Thinker, any unit or individual shall not extract or copy part or all of these resources, and shall not be transmitted in any form. You are not entitled to use any other Ai-Thinker intellectual property rights or any third party intellectual property rights. You shall indemnify you in full for any claims, damages, costs, losses and liabilities arising against Ai-Thinkeror its representatives in connection with the use of these resources, for which Ai-Thinker is not liable.

The products offered by Ai-Thinker are subject to the terms of sale of Ai-Thinker or other applicable terms attached to Essence's products. Essence's availability of these resources does not extend or otherwise change the warranties or warranties disclaimers applicable to product releases.

Copyright © 2024 Shenzhen Ai-Thinker Technology Co., Ltd All Rights Reserved